Operator's manual

lamp for operating theatre

ORION 40

Mobile *(LC001LRA)*
Wall*(LC002LRA)*
Single Ceiling *(LC003LRA)*
Double Ceiling (ORION 40+ORION 40) *(LC004LRA)*

Introduction

Dear user,
You are kindly invited to read this manual carefully before proceeding to use the Product in order to safeguard yourself and other people from any injuries.

Mark CE

This appliance is a Class 1 medical device pursuant to European Directives on medical devices (MDD) 93/42/EEC, Annex IX, and 2007/47/EC.

Conformity

The manufacturer declares that this product is in compliance with Annex I (essential requirements of Directive 93/42/EEC and certifies such conformity by affixing the CE mark.
The Product is classified in risk group 1 according to IEC 62471 standard (Photobiological Safety of Lamps).

Validity of manual

This operator's manual refers to the following Products:

- ORION 40 single-ceiling version
- ORION 40 double-ceiling version (ORION 40+ORION 40)
- ORION 40 mobile version
- ORION 40 wall version

Customer service

The customer service is at your disposal in case of Product details, information concerning its use, identification of spare parts being required and for any other queries you might have concerning the appliance, for ordering spares and for matters relating to assistance and warranty.

- TECNO-GAZ
- Strada Cavalli, 4
- I-43038 Sala Baganza - Parma -
- Tél.: +39 – 0521 – 83.39.26
- Fax: +39 – 0521 – 83.33.91
- e_mail: info@tecnogaz.com

Copyright

The contents of this Manual may be amended by TECNO-GAZ, without prior notice or any further obligations, in order to make changes and improvements. The reproduction, including partial, or translation of any part of this manual is forbidden without the written permission of TECNO-GAZ.

Right to make changes

TECNO-GAZ reserves the right to change, cancel or otherwise amend the data contained in this document at any time and for any reason without prior notice inasmuch as TECNO-GAZ is constantly seeking new solutions which lead to product evolution. TECNO-GAZ therefore reserves the right to make changes to the supplied Product in terms of shape, fittings, technology and performances.

Translations

With regard to translations into languages other than Italian, reference shall always be made to the Italian edition of this operator’s manual.

Manufacturer's declaration of conformity CE

The company:
TECNO-GAZ S.P.A. Strada Cavalli n. 4 - CAP 43038 - Sala Baganza – Parma – ITALY
Declares under its own responsibility that the Product (Medical lighting device for surgical and diagnosis use):

ORION 40
APPLICARE ETICHETTA

made by TECNO-GAZ S.P.A., complies with Annex VII of Directive 93/42/EEC dated 14/05/1993, and subsequent amendments (including Directive 2007/47/EC dated 05/09/2007) and the following standards:

- IEC 60601-1 (Part 1: General requirements for safety)
- IEC 60601-2-41 (Part 2: Particular requirements for safety)
- IEC 60601-1-2 (Part 1: General requirements for safety - EMC)

Classification with reference to article 9 and Annex IX of Directives 93/42/EEC and 2007/47/EC	
DURATION:	Short term (Par.1 "Definitions", art.1, sub-section 1.1, annex IX)
DESCRIPTION:	Non-invasive medical device (Par.1 "Definitions", art.1, sub-section 1.2, annex IX)
	Active medical device (Par.1 "Definitions", art.1, sub-section 1.4, annex IX)
CLASS:	I (Par.3 "Classification", art.1, sub-section 1.1 Rule 1, annex IX)

Name: Paolo Bertozzi
Position: Managing Director

Sala Baganza, 19-04-2012

TECNO GAZ DENTISTICA

Table of Contents

1 Important information for the user 7

1.1 User qualification 7

1.2 Precautions for safe appliance operation.....8

2 Precautions for the appliance operator..... 8

2.1 Technical safety specifications 8

2.2 Personnel training obligation.....8

2.3 Warranty and liabilities.....9

2.4 Structural changes or variations 9

2.5 Disposal after use 9

3 Importance of personal safety 9

3.1 Intended use 9

3.2 Environmental conditions.....10

3.3 Use in combination with other medical products.....10

3.4 Technical safety conditions.....11

3.5 Other safety conditions (secondary effects).....11

3.6 Graphic symbols used in this manual 12

3.7 Other graphic symbols used on the device.....12

4 Lamp description and operation..... 13

4.1 Description of the Product 13

4.2 Description of the operation.....14

5 Cleaning and disinfection..... 15

5.1 Cleaning the Product 15

5.2 Disinfecting 15

5.3 Sterilizing the handpieces.....16

5.4 Yearly inspections by the keeper 17

5.5 Repairs 17

6 Adjustments 17

6.1 Setting the rocker arm 17

6.2 Adjustment of the braking force 18

6.3 Troubleshooting 18

6.4 Routine maintenace 19

6.5 Spare part list 19

7 Technical data 20

8 EMC compliance 22

Notes 24

1 Important information for the user

Product

The ME (Medical-Electrical) EQUIPMENT to which this manual refers is a LAMP for Operating Theatre or SYSTEM of LAMPS for Operating Theatre. For ease of description, this ME EQUIPMENT will be referred to in this manual with the name of "Product".

1.1 User qualification

Personnel

The Product and these operating instructions are intended for use by medical personnel and qualified technicians working in hospitals and medical surgeries who have acquired working skills by undergoing medical training and who are in possession of necessary authorisation where required.

Personal safety

Importance of personal safety. Before using the Product, read the safety precautions in paragraphs 2.1, 3.4 and 3.5

Adjustments

The operations described in Chapter 6 "Adjustments" must be performed by a qualified technician of the Product operator in accordance with the safety rules and precautions indicated in this operator's manual.

Cleaning

Product cleaning can only be done by duly trained personnel.

Importance of manual

This manual is an integral part of the Product according to the provisions of the European Directives 93/42/EEC and 2007/47/EC.

Always keep this operator's manual close to the Product so as to be able to refer to it in case of doubts relating to lamp use, safety matters and other important information.

Never transfer the Product to another user or to other premises without its being accompanied by this operator's manual.

This manual must always accompany the Product.

These operating instructions must always be easily accessible to any Product user.

You are invited to carefully read this operator's manual before using the Product. This way, you can make best use of Product potential and protect yourself and others from any injuries.

1.2 Precautions for safe appliance operation

Correct installation

This operator's manual is only valid after the correct installation of the Product, made in compliance with the valid installation instructions and with the correct startup by a professional installer. This operator's manual does not replace the obligation to instruct the user to carry out operations important for safety, operating, using and looking after the Product.

Safety provisions

The Product is made according to the current state of the art and its operation is safe, as long as it is used in compliance with all operating instructions and safety precautions.

Use of the Product can nevertheless be dangerous, especially if it is used by unqualified or inexpert persons or in an incorrect way, without abiding by the safety precautions contained in this operator's manual or in a way not in compliance with intended use.

To only be used in compliance with intended use

The Product is only designed to be used for the purposes indicated in this operator's manual. Any other use could cause mortal danger and/or hazards for the Product and the other material assets of the operator.

2 Precautions for the appliance operator

2.1 Technical safety specifications

Cleaning personnel

The Product cleaning and disinfecting operations described in Chapter 5 must only be performed by duly trained personnel.

Servicing personnel

The inspection and maintenance operations described in Chapter 6 must only be performed by professional technical personnel.

2.2 Personnel training obligation

Instructing users

Instruct personnel according to the operating instructions as regards controlling, cleaning and looking after the lamp.

The operator must provide such personnel with written instructions based on this manual.

2.3 Warranty and liabilities

TECNO-GAZ disclaims all liability as regards unreliable Product operation in the following cases:

- assembly, changes and repairs not being made by a technician who has attended a training course on the Product organised by the manufacturer or by a professional technician,
- the Product not being used for the purposes for which it was intended, in compliance with the operating rules and instructions.

2.4 Structural changes or variations

Arbitrary changes

For safety reasons, no arbitrary structural changes or variations to the Product are acceptable. In case of changes or transformations of this kind, the manufacturer's Product warranty shall be invalidated. The manufacturer thus disclaims all liability for any damage or injuries caused by any arbitrary structural modifications or variations made or the use of non-original spare parts.

Only use original TECNO-GAZ spare

The use of parts not supplied by TECNO-GAZ or its dealers shall invalidate the warranty.

2.5 Disposal after use

Disposal at the end of life cycle

The used Product contains valuable materials which can be recycled.

Dispose of the used Product in an environment-friendly way and in compliance with applicable national directives on waste disposal.

3 Importance of personal safety

3.1 Intended use

Use in compliance with standards

The Product is made to light up the area occupied by the patient undergoing surgery or observation and has been designed for use in operating theatres or medical surgeries.

Field of work

The Product correctly lights up the field of work from a distance of about 70 – 140 cm from the point of operation.

Single lamp:

Definition

In compliance with the IEC60601-2-41 standard, a single lamp (ORION 40) is a secondary scialytic lamp for surgery and can only be used in operations where the interruption of lighting does not cause risks for the patient.

System of operating lamps:

Definition

In compliance with the IEC60601-2-41 standard, a system of lamps made up of several lamp units can be used to locally light up the patient's body without any limitation. It is also suitable for continuous function.

It enables the surgeon to operate also in the most difficult conditions of visibility. It is intended to make treatment and diagnosis possible and to be used in operating theatres.

Undesired effects caused by superimposition of light fields

If the light fields of several lamp units are superimposed, there will be an increase in heat in the patient area with consequent dehydration of tissues and, above all in the case of prolonged operation and reduced blood supply, considerable damage to tissues.

If reduced blood supply or the start of tissue dehydration occurs, reduce the light intensity.

3.2 Environmental conditions

- The Product is not suitable for use in explosion-risk areas.
- The Product is not suitable for use in the presence of inflammable mixtures of anesthetics with air, oxygen or NO_2 (laughing gas).
- During operation, the ambient temperature must be between 10°C and 40°C.
- Relative humidity must be between 30% and 75%.
- Atmospheric pressure must be between 700 and 1060hPa.

3.3 Use in combination with other medical products

- the Product can be equipped with appliances of other manufacturers. Refer to the operating instructions for such appliances.
- Only fit medical devices (e.g., LCD monitors) bearing the CE mark.

3.4 Technical safety conditions

The safe use and proper operation of the Product is ensured if:

Safe fastening	The lamp is safely fastened to the ceiling/wall from a static viewpoint and a static stability test exists,
Wiring systems	The wiring systems of the premises involved are in compliance with applicable local regulations,
Authorised personnel	Changes to the lamp or maintenance jobs are performed by personnel trained by TECNO-GAZ or by a professional technician
Correct assembly and start up	The Product has been installed following currently valid installation instructions and has been started up by a professional installer,
Original spares	With regard to assistance, repairs, structural changes and additional accessories, only original TECNO-GAZ spare parts are used.

3.5 Other safety conditions (secondary effects)

Optical safety	- Do not direct the light source into the patient's and/or operator's eyes. - Obligation to adequately protect the patient's eyes. Failure to follow such precautions could cause glare and potential damage to the retina.
Incorrect use	- Never place and/or hang anything on the Product. Unless this precaution is taken, positioning will not be reliable and the danger exists of such objects falling in the operating area. - Never hang on the Product with the body weight of a person. Unless this precaution is taken, mechanical parts of the Product could be damaged.
Covering the heads	- Never cover the head of the Product during operation. Failure to comply could prevent heat exchange with the environment and the Product could overheat.
Knocks	- Avoid knocking the rocker arms and Product head. A violent knock could damage the Product and pieces of paint could chip off and fall onto the operating field in the patient area.

3.6 Graphic symbols used in this manual

In these operating instructions and on the lamp itself, important indications are marked by means of symbols and notice words.
Notice words such as HAZARD, CAUTION or IMPORTANT indicate the classification of the risk of suffering injuries.

HAZARD indicates an immediately hazardous situation which could result in death or serious injuries.
CAUTION indicates a potentially hazardous situation that could result in death or serious injuries.
IMPORTANT indicates a potentially hazardous situation which could result in moderate or light injuries.

The following triangular symbol together with the explanation alongside indicates the type of hazard to be dealt with :

⚠	**Electric shock, Mechanical hazard from sprung masses (quick break of a damped arm during installation)**

3.7 Other graphic symbols used on the device

Below are the symbols to be found on the Product:

B-Type device. Indicates the level of protection against direct and indirect contact

Graphic symbol proving the EC marking of the product

Symbol indicating the manufacture date (month and year)

Fuses used by the device

4 Lamp description and operation

4.1 Description of the Product

Version

The Product is available in different versions:

- mobile version
- wall version
- ceiling single version
- ceiling double version (scialytic lamp system)

See drawing 119

MOBILE version: wheel base (1), power supply unit (2), base cover (3), vertical stem (4), oscillating arm (5), fork (6), lamp cupola (7), function control keyboard (8), sterilizable handle (9), power supply plug (10), switching on base (11).

See drawing 120

WALL version: wall plate (1), power supply unit (2), wall box (3), horizontal arm (4), oscillating arm (5), fork (6), lamp head (7), function control keyboard (8), sterilizable handle (9), power supply plug (10).

See drawing 121

CEILING SINGLE version: ceiling cover (1), ceiling anchorage tube (2), power supply unit (3), horizontal arm (4), oscillating arm (5), fork (6), lamp head (7), function control keyboard (8), sterilizable handle (9).

See drawing 122

CEILING DOUBLE version: ceiling cover (1), ceiling anchorage tube (2), power supply unit (3), double horizontal arm (4), oscillating arm (5), fork (6), lamp head (7), function control keyboard (8), sterilizable handle (9).

4.2 Description of the operation

Control panel

The membrane keyboard is located on the fork. It can control:

- On/Off button (1)
- Sun button (2): light intensity adjustment. The intensity level is indicated by 5 green microleds
- "K" button (3): color temperature selection 4.500 – 5.000K
- "E" button (4): dental care function. Function available only when the lamp is switched off
- Light field diameter selection (5), increase or decrease the light field diameter.

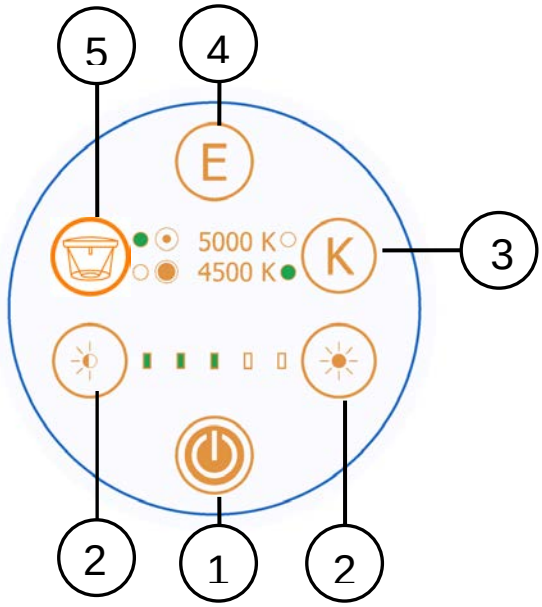

Remote control panel

As optional, the lamp can be equipped by a wall control panel: an additional keyboard control all the functions listed above.

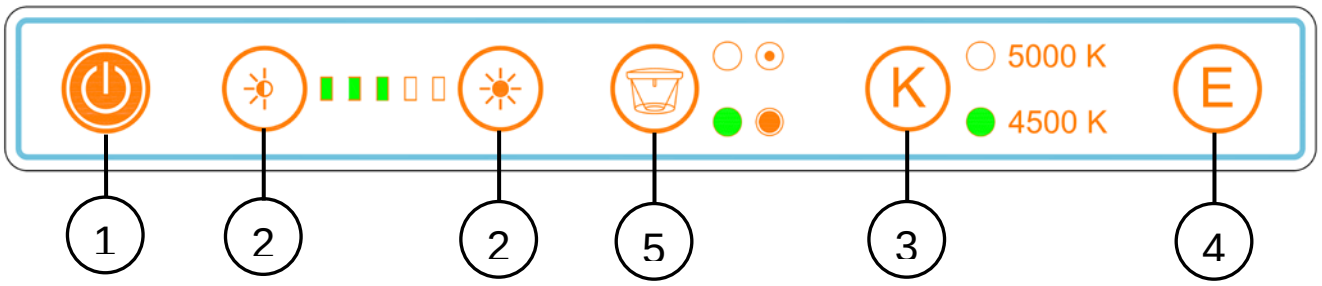

5 Cleaning and disinfection

5.1 Cleaning the Product

⚠	**CAUTION – Electric shock hazard**

Switch the Product off by means of the operating theatre main switch and make sure it cannot be switched back on.

Protect the Product against water spray and do not clean it/disinfect it with liquids.

Leave the lamp body to cool down. Only clean the lamp body when it is cold.

Clean with appropriate detergent with low alkaline content and chlorine free.

IMPORTANT Do not use abrasive products, petrol, paint thinners, alkaline detergents, acids, containing alcohol or aldehydes;

Dose the detergents so no liquids penetrate into the lamp bodies and into the support arm system.

Clean the Product with a damp but not wet cloth.

IMPORTANT Non respecting the instructions of cleaning and disinfection could cause paint detachment with possible fall in the patient area, early deterioration of plastic parts and glass opacification.

5.2 Disinfecting

⚠	**CAUTION – Electric shock hazard**

Switch the Product off by means of the operating theatre main switch and make sure it cannot be switched back on.

Protect the Product against water spray and do not clean it/disinfect it with liquids.

Leave the lamp body to cool down. Only disinfect the lamp body when it is cold.

CAUTION Disinfectants can contain substances which are harmful for the health: only use disinfectants in accordance with the rules on hygiene established by the hospital.

The Product operator must comply with the rules established by the national commission for hygiene and disinfection.

IMPORTANT

To prevent damaging parts in stainless steel or aluminium, only use disinfectants which are chlorine and halogen free.

To prevent the plastic parts becoming fragile, use only disinfectants with low alcohol content.

Dose the disinfectants so no liquids penetrate inside the lamp bodies and into the support arm system.

Clean the Product with a damp but not wet cloth.

5.3 Sterilizing the handpieces

⚠	**CAUTION – Hazard for the patient**

Replace the handpieces as soon as these become cracked or deformed, as these could fall in the wound area.

The Product operator must comply with the rules of the national commission for hygiene and disinfection.

Handpiece fitting / removal:

- press the handpiece safety key and remove the handpiece.
- insert the handpiece up fast and turn it until it fastens on and rotation is blocked .

Cleaning, disinfecting and sterilizing the handpiece:

The handpieces are made of plastic material resistant to heat and knocks (PPSU).

They can be cleaned with a lightly-alkaline detergent free of active chlorine.

To disinfect the handpieces, we suggest using alcohol or aldehyde-based products. The disinfectants must be approved by the manufacturer for use on polyphenylsulfone (PPSU).

Before sterilizing, rinse the handpieces.

The handpieces can withstand about 300 steam sterilization cycles as follows:

- steam sterilization at 121°C 1.3bar from 25 to 30 minutes,

or

- steam sterilization at 134°C 2.3 bar for 4 minutes.

Position the handpieces straight with open side downwards.

Do not exceed a sterilization temperature of 134°C.

Avoid the handpieces coming into contact with other objects during the disinfection process.

Each Product, over time, is subject to a certain amount of wear. Product safety and operation must therefore be checked during inspection and maintenance intervals.

5.4 Yearly inspections by the keeper

⚠	**ATTENTION**

Keep to the yearly inspection schedules and inspect the product according to IEC 62353 standard.

5.5 Repairs

⚠	**CAUTION – Unsuitable repairs**

The Product must only be opened and repaired by a technician who has attended a course on the Product organised by the manufacturer or by a qualified technician in possession of the necessary technical skills.

6 Adjustments

6.1 Setting the rocker arm

See drawing 123

The Product is sold already balanced and does not require further adjustment. In the event of the swinging arm with spring balancing becoming stiff or loose over time, mechanical intervention is possible by regulating the compression of the internal spring.

Loosen the two stop dowels (1) which secure the cover (2) and move this forward. Fit a pin (3) with max diameter of 7 mm in the holes of the ring nut and turn in the direction indicated by the arrows to increase/decrease the load on the spring.

If the swing arm drops, this means the elastic force of the spring is insufficient:

- turn the lever downwards and load the spring.

If the swing arm continues to lift up, this means the elastic force of the spring is too high:

- turn the lever upwards and release the spring.

After making adjustments, return the covering to its original position.

6.2 Adjustment of the braking force

See drawing 123

The brakes are set during installation. As for all the mechanic parts, brakes also are subject to wear and tear.

If the lamp body does not automatically keep the position in which it is put, it is necessary to adjust the braking force by acting on the screws of the brakes.

Horizontal arm brakes

Use a cut-suitable screwdriver to increase the braking force, rotating clockwise the screws (4) and (5) of the horizontal arm.

Fork brakes

To increase the head braking force, rotate clockwise the dowels (6 and 7) of the brake with an Allen key.

6.3 Troubleshooting

No.	Problem	Solution
1	The Product does not remain in position	Make sure the plate fitted on the wall (wall) is perfectly flat, that the stem is flat on the base (mobile) and that the tube secured to the ceiling (ceiling) is level. Further tighten the brakes on the joints so as to increase friction.
2	The Product fails to work	Make sure fuses have been fitted inside the terminal board. Make sure the electrical connectors are fitted. Make sure there is power voltage in the lamp head (18/26VDC))
3	The fuse continues to burn out	Check the specifications of the fitted fuses T1A (primary) and T6,3A (secondary) for 230Vac supply T2A (primary) and T6,3A (secondary) for 100Vac supply T2A (primary) and T10A (secondary) for battery
4	The light flickers and produces a stroboscopic effect	Contact the after sales service.
5	The light beam on the operating field is not focalised (defective meeting of light fields)	Contact the after-sales service.
6	The Product does not switch on	Check the supply power voltage and check the fuses. The electronics are faulty: contact the after-sales service.

6.4 Routine maintenace

no.	Period	Job
1	Every 6 months	Inspect all the lamp joints and make sure they do not squeak. If they do, add white grease to the clutches involved. If the Product does not maintain the position, adjust the clutches. To determine which clutches to adjust, see point **6.2**.
2	Once a year	Make sure the Tiges retention screws are tightened properly. Also check the 6 horizontal arm retention screws and the 3 swing arm screws. If these are not properly fastened, adequately tighten.
3	Once a year	Check the integrity of the leads from the PCB to the board and that these are fastened properly. If they are not, proceed to correctly tighten. **INTERRUPT THE POWER SUPPLY BEFORE PERFORMING THESE OPERATIONS.**
4	Once a year	Make sure the line voltage is correct. Make sure 24V are reaching the board.
5	Once a year	Check the condition of the lamp paint. Make sure there are no paint pieces that could fall on the operating field.

6.5 Spare part list

Description	Order code
Sterilizable handle	Z200518
Electronic card ORION 40	Z300632-PL30E
Keyboard ORION 40	Z300227

7 Technical data

Technical data on light	ORION 40	ORION 40+ORION 40
Illumination E_c at a distance of 1 m ± 10% (5000 K) [Lux] ± 10%	130.000	130.000+130.000
Illumination E_c at a distance of 1 m ± 10% (4500 K) [Lux] ± 10%	80.000	80.000 + 80.000
Colour temperature [K] ± 5%	4.500 / 5.000	
Colour rendering index R_a [-]	96 / 96	
R_9	90	
No. Leds	No.30	No.30 + No.30
Focus	Fixed	Fixed + Fixed
Light field diameter adjustable from – to [cm]	16 - 28	16 – 28 (16 - 28)
Diameter of the light field d_{50} [mm]	80	80 + 80
Diameter of the light field d_{10} [mm]	160	160 + 160
Illumination depth L1 + L2 [cm]	35+18	(35+18) + (35+18)
Maximum irradiation [W/m^2]	299	299 + 299
Irradiation / Illumination [mW/m^{2}lx]	2,3	2,3 + 2,3
Maximum irradiation in the UV [W/m^2]	0,002	0,002 + 0,002
Focusing by handle	No (electronic focusing)	
Data on electrical connection		
Primary alternating voltage [Volt ac]	100 ÷ 240	
Secondary continue voltage [Volt dc]	24	24
Frequency [Hz]	50/60	
Absorbed power [VA]	70	70 + 70
Light source	n°30 LEDs	n°30 + n°30 LEDs

Led diode light source duration [h] (this datum can vary according to a power voltage higher than the specified one, voltage peaks and the frequency of use)	50.000	
Control of the illuminance [%]	50-100	
General data		
Colour	RAL 9003	
Directive	2007/47/EC	
Standard	IEC 60601-2-41	
Electrical safety class	Class I	
Protection against direct and indirect contacts	B-type device	
Dimensions		
Lamp body diameter [cm]	40	40 + 40
Diameter of the poly-elliptical reflectors [cm]	n°30x5,5	n°30x5,5 + n°30x5,5
Light emission surface [cm^2]	712	712 + 712
Scialytic ceiling single, floor, wall, ceiling double ORION 40+ORION 40 lamp weight [Kg]	35, 32, 27, 55	
Certificates		
CE	Complying with directive 93/42/EEC and 2007/47/EC	
All lighting values are subject to a tolerance of ± 6% due to manufacturing and metrological reasons.		

8 EMC compliance

The Product has been tested in accordance to EN60601-1-2 to ensure proper electromagnetic compatibility. Portable and mobile RF-communications equipment can affect the Product. Other products used in the vicinity of Product should also comply with this standard.
The Product is intended for use in the electromagnetic environment specified below. The customer or the user of the Product should assure that these are used in such an environment.

Emissions test	Compliance	Electromagnetic environment-guidance
RF emissions CISPR 11	Group 1	The Product uses RF energy only for its internal function. Therefore, its RF emissions are very low and are not likely to cause any interference in nearby electronic equipment.
RF emissions CISPR 11	Class A	The Product is suitable for use in all establishments other than domestic, and may be used in domestic establishments and those directly connected to the public low-voltage power supply network that supplies buildings used for domestic purposes, provided the following warning is heeded: **Warning:** This equipment/system is intended for use by healthcare professionals only. This equipment/system may cause radio interference or may disrupt the operation of nearby equipment. It may be necessary to take mitigation measures, such as re-orienting or relocating the Product or shielding the location
Harmonic emissions IEC 61000-3-2	Class A	
Voltage fluctuations/ flicker emissions IEC 61000-3-3	Compliance	

Immunity test	IEC 60601-1-2 test level	Compliance level	Electromagnetic environment-guidance
Electrostatic discharge (ESD) IEC 61000-4-2	+/- 6 kV contact +/- 8 kV air	+/- 6 kV contact +/- 8 kV air	Floors should be wood, concrete or ceramic tile. If floors are covered with synthetic material, the relative humidity should be at least 30%
Electrical fast transient / burst IEC 61000-4-4	+/- 2 kV for power supply unit +/- 1 kV for input/output lines	+/- 2 kV for power supply lines +/- 1 kV for input/output lines	Mains power quality should be that of a typical commercial or hospital environment.
Surge IEC 61000-4-5	+/- 1 kV differential mode +/- 2 kV common mode	+/- 1 kV differential mode +/- 2 kV common mode	Mains power quality should be that of a typical commercial or hospital environment.
Voltage dips, short interruptions and voltage variations on power supply input lines IEC 61000-4-11	<5% U_T (>95% dip in U_T) For 0,5 cycle 40% of U_T (60% dip in U_T) For 5 cycles 70% of U_T (30% dip in U_T) For 25 cycles <5% U_T (>95% dip in U_T) For 5 sec	<5% U_T (>95% dip in U_T) For 0,5 cycle 40% of U_T (60% dip in U_T) For 5 cycles 70% of U_T (30% dip in U_T) For 25 cycles <5% U_T (>95% dip in U_T) For 5 sec	Mains power quality should be that of a typical commercial or hospital environment. If the user of the Product requires continued operation during power mains interruptions, it is recommended that the Product be powered from an uninterruptible power supply or battery.
Power frequency (50/60Hz) magnetic field IEC 61000-4-8	3 A/m	3 A/m	Power frequency magnetic fields should be at levels characteristic of a typical location in a typical commercial or hospital environment.
NOTE U_T is the a.c. main voltage prior to application of the test level.			

Notes

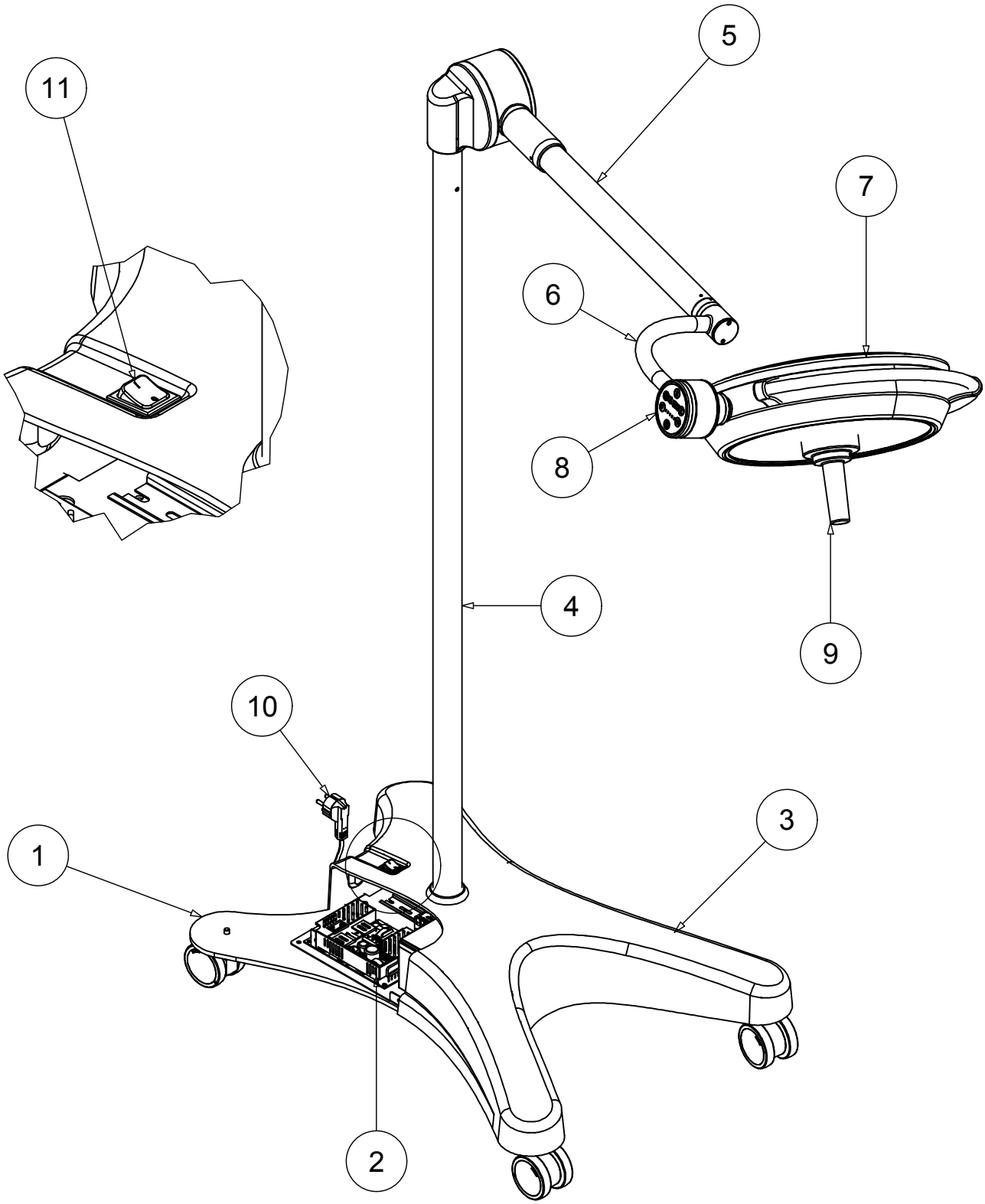

		Drawing code
Rev.	Data	119

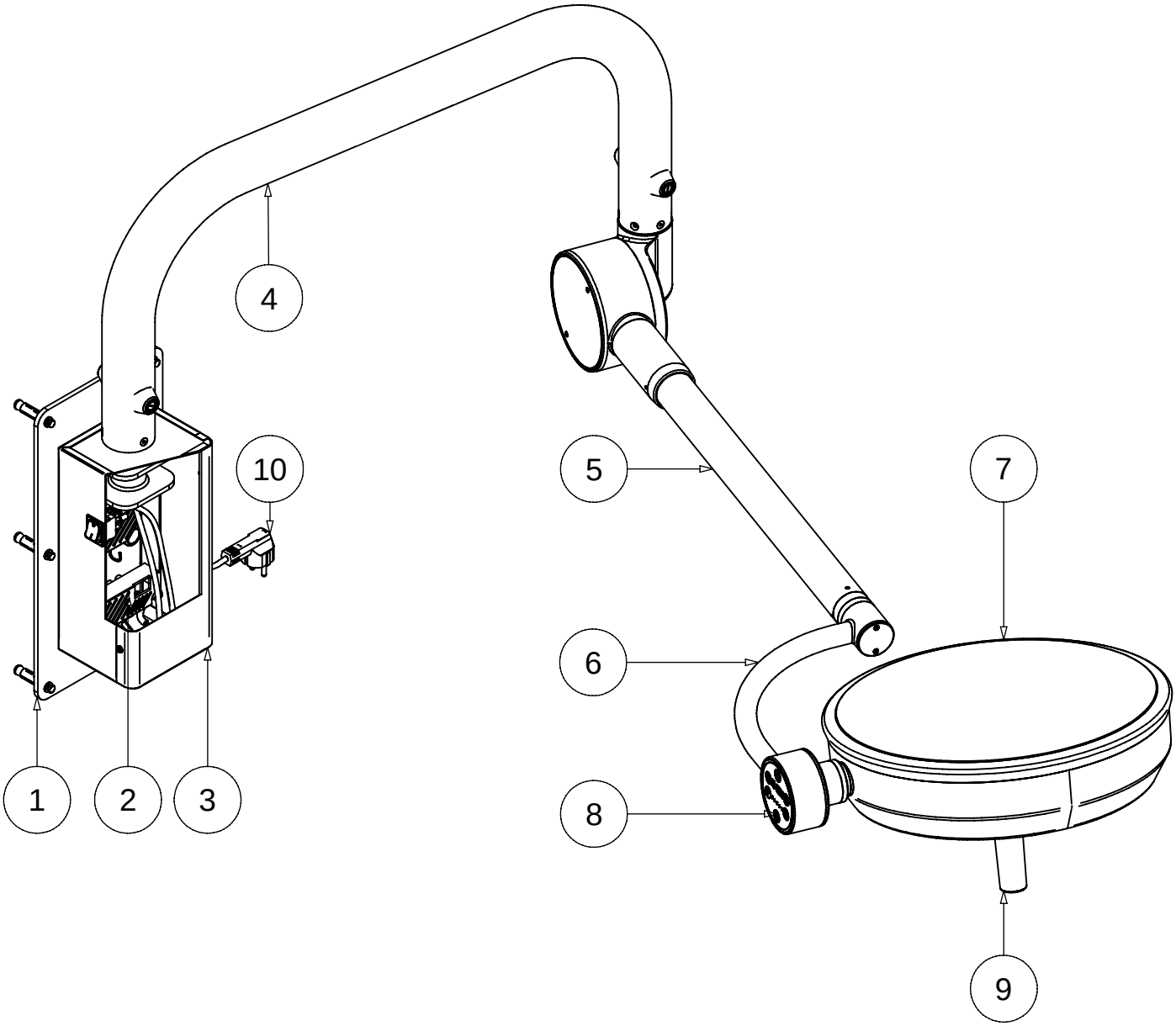

		Drawing code
Rev.	Data	120

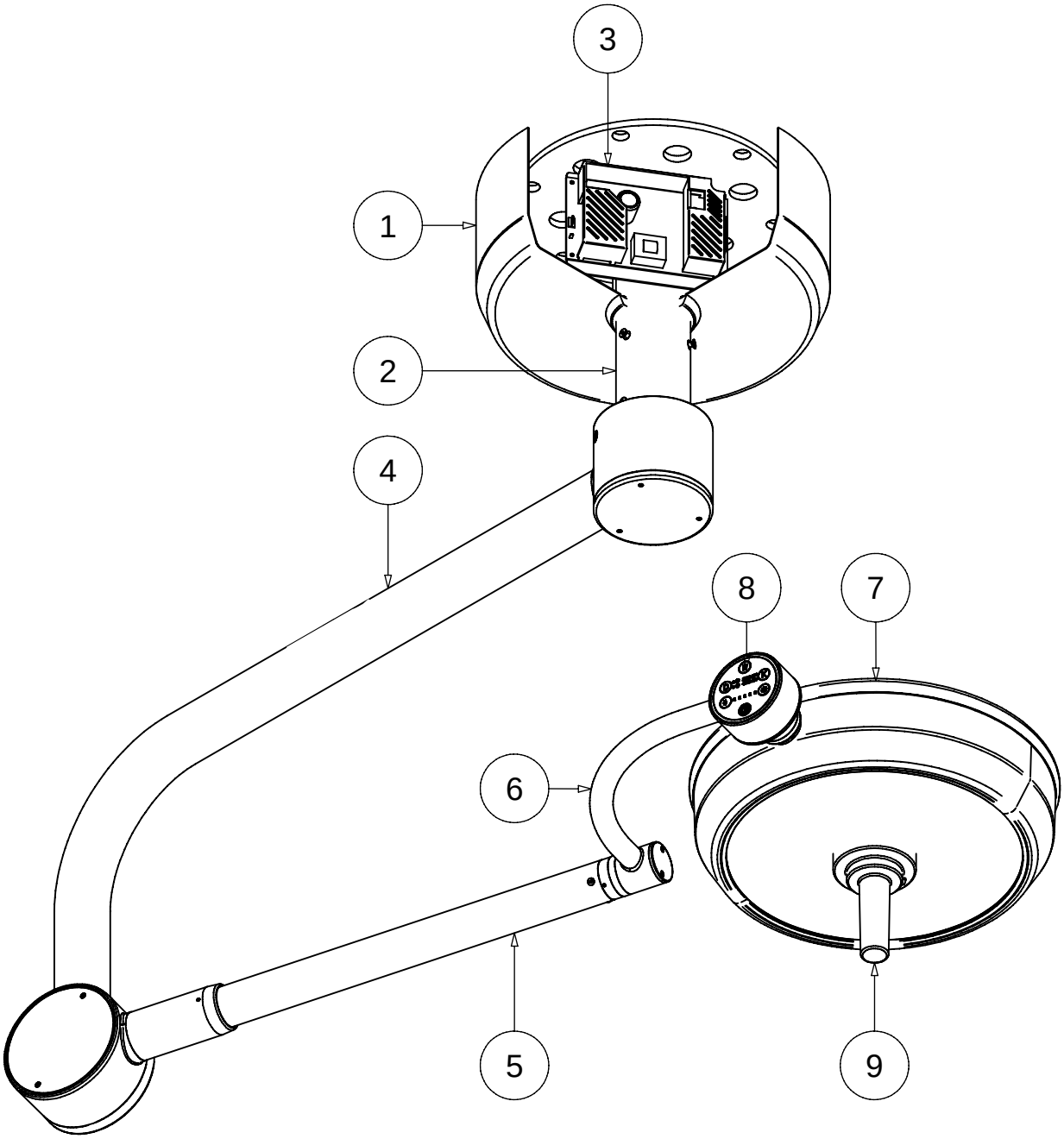

		Drawing code
Rev.	Data	121

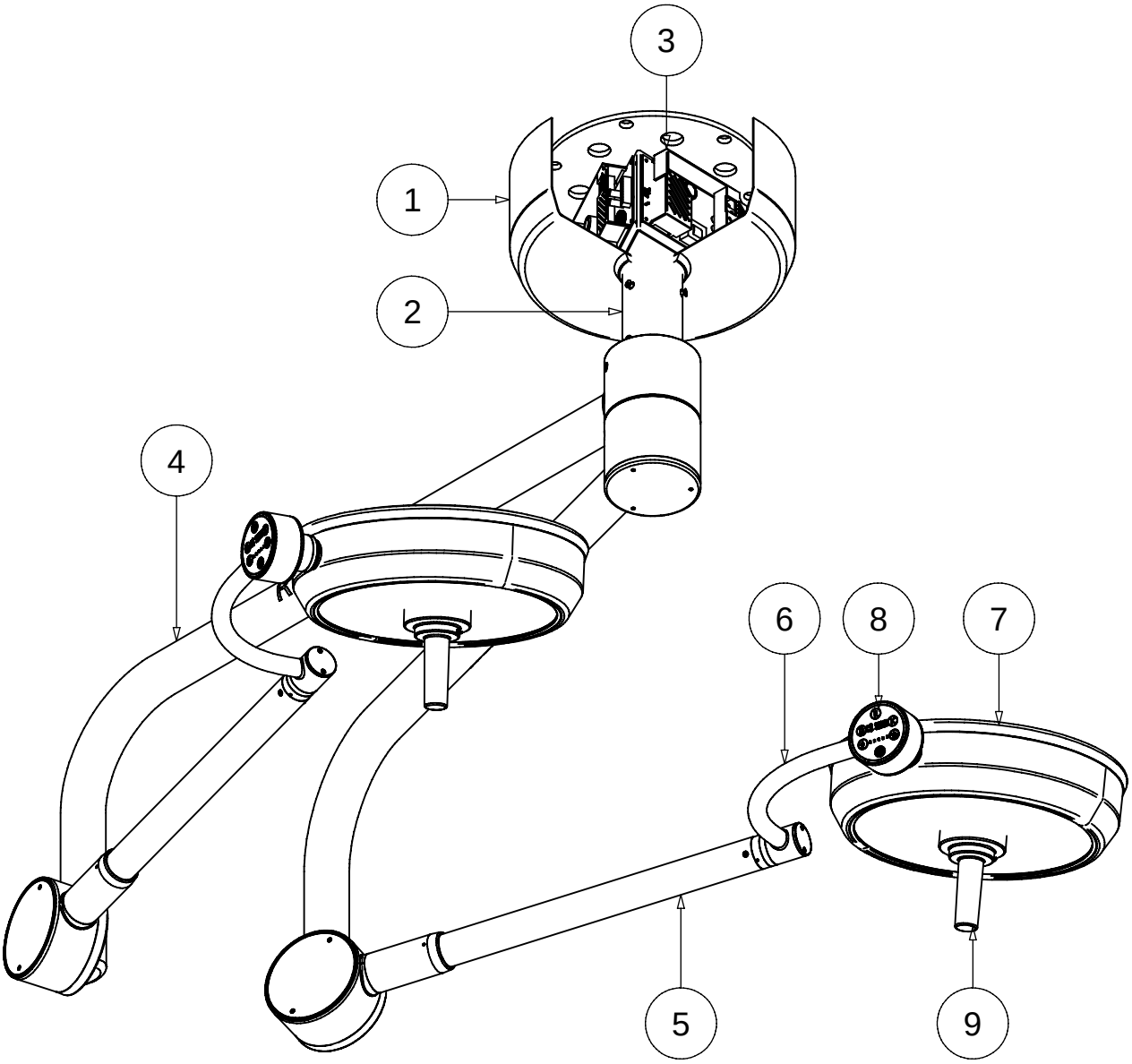

		Drawing code
Rev.	Data	122

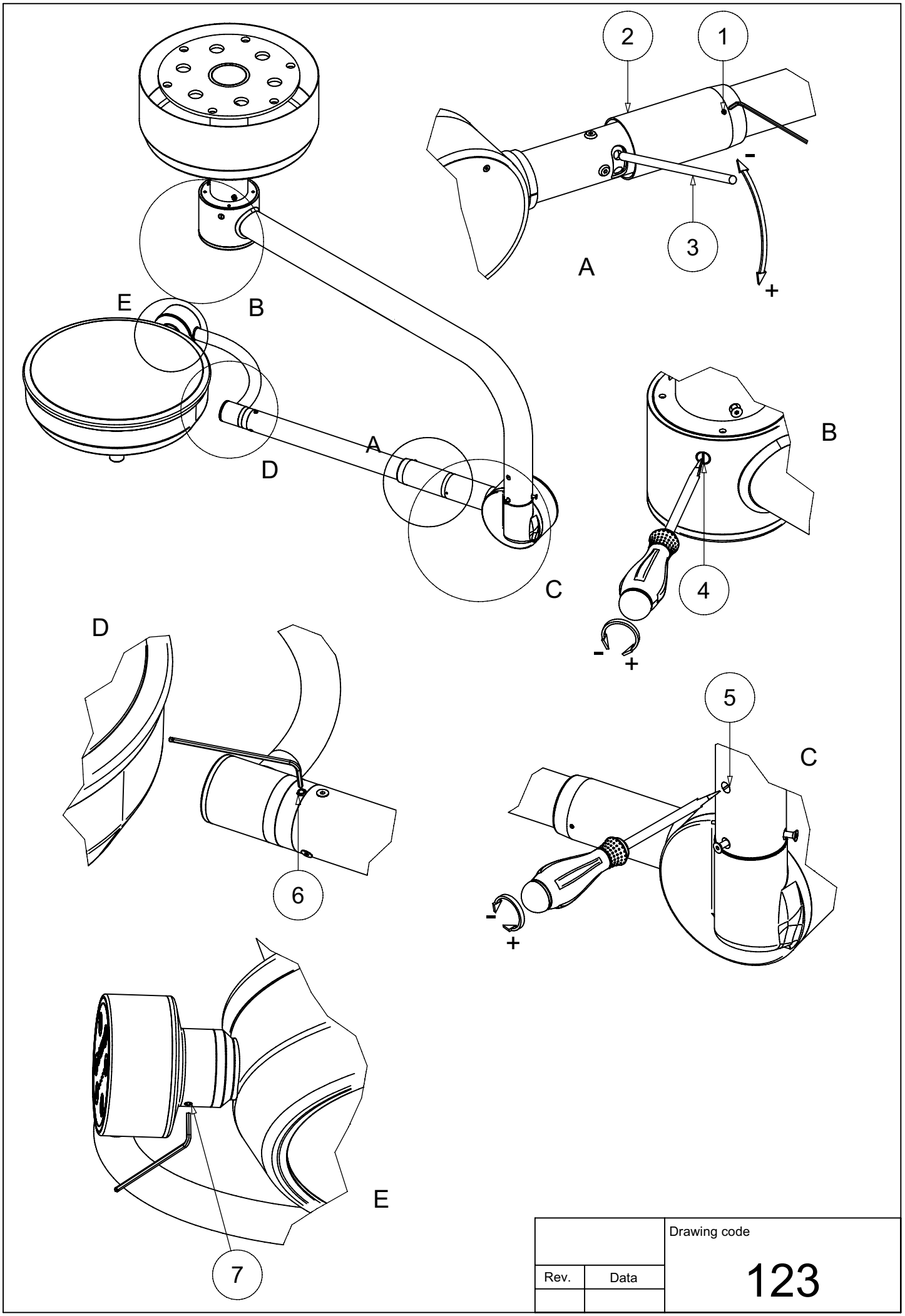

		Drawing code
Rev.	Data	123